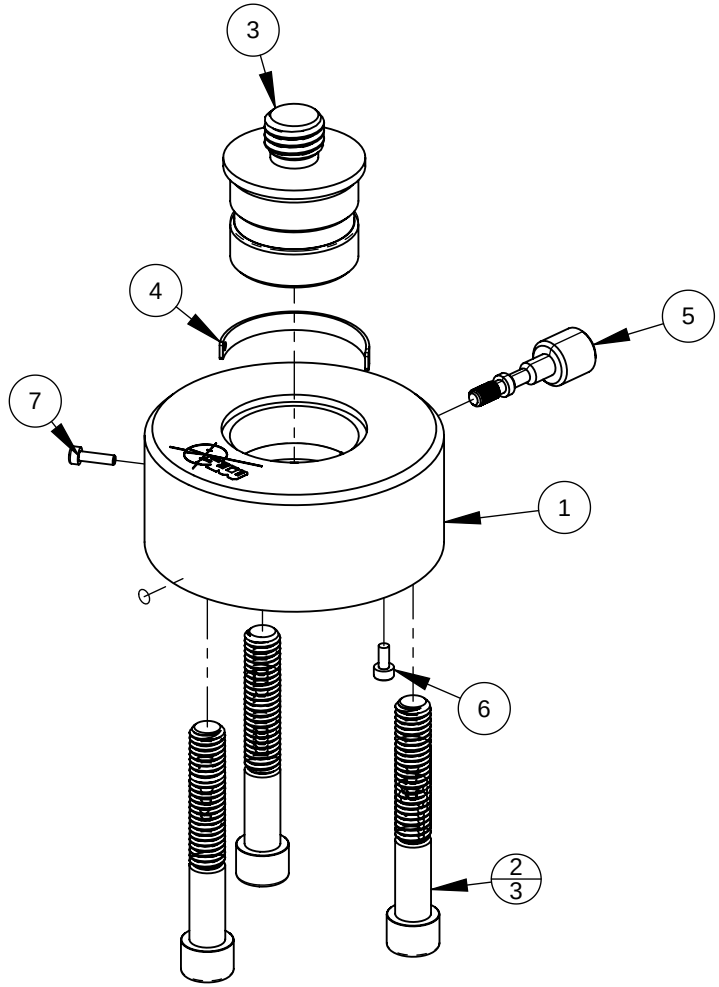

ITEM NO.	PartNo	DESCRIPTION	QTY
1	2072-20-001	BASE,ADAPTER,MONUMENT	1
2	3/8-16X21/2SCSS	SCREW,SOC CAP,3/8-16X2-1/2,SS	3
3	2070-002	ADAPTER,PLUG,TRIBRACH	1
4	2070-004	SPRING,LOCK,TRIBRACH	1
5	2070-005	SCREW,LOCK,TRIBRACH,1.59",10-32	1
6	440X1/4SC	SCREW,SOCKET CAP,4-40 X 1/4 LONG	1
7	440X3/8SC	SCREW,SOCKET CAP,4-40 X 3/8 LONG	1

***NOTE**
Components may be sold separately.
Please see sub-assembly part number drawing for details.

2072-20 | **ADAPTER,MONUMENT,MASONRY**

X X ITEM# QTY

DATE: 5/2/2006

REV. A | PAGE 1 OF 1

MANUFACTURING CO., INC.
4155 OASIS ROAD, REDDING, CA 96003