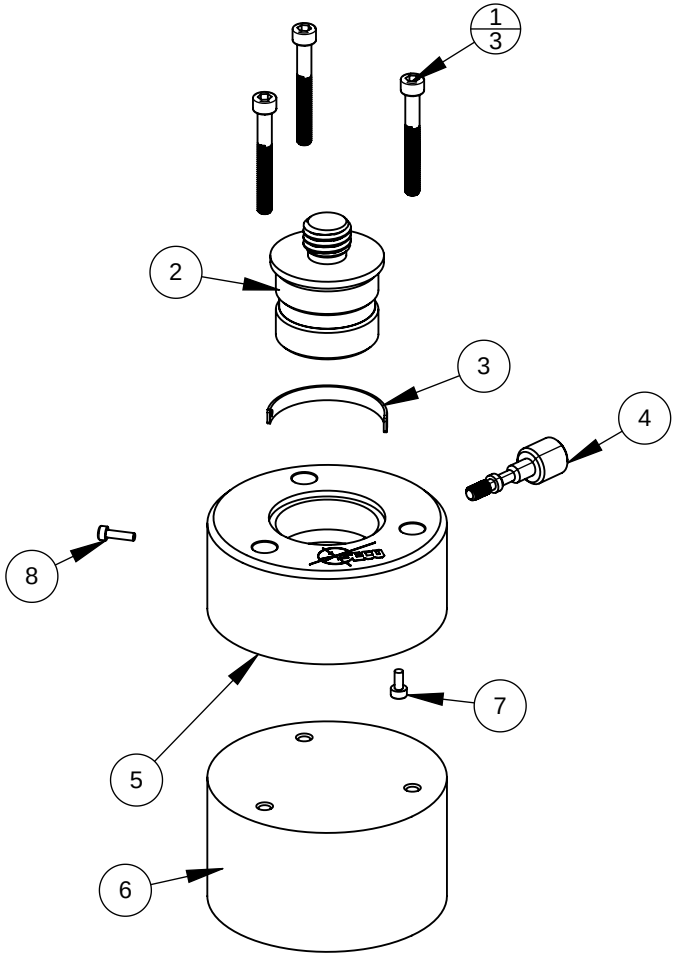

ITEM NO.	PartNo	DESCRIPTION	QTY
1	1032X11/2SCSS	SCREW,SOCKET CAP,10-32 X 1-1/2 LONG,SS	3
2	2070-002	ADAPTER,PLUG,TRIBRACH	1
3	2070-004	SPRING,LOCK,TRIBRACH	1
4	2070-005	SCREW,LOCK,TRIBRACH,1.59",10-32	1
5	2072-10-001	BASE,ADAPTER,MONUMENT,2" PIPE	1
6	2072-10-002	ADAPTER,MONUMENT,2" PIPE	1
7	440X1/4SC	SCREW,SOCKET CAP,4-40 X 1/4 LONG	1
8	440X3/8SC	SCREW,SOCKET CAP,4-40 X 3/8 LONG	1

***NOTE**
Components may be sold separately.
Please see sub-assembly part number drawing for details.

2072-10	**ADAPTER,MONUMENT,2" PIPE MOUNT**	X/X ITEM#/QTY	**DATE:** 4/10/2007	MANUFACTURING CO., INC.
			REV. A PAGE 1 OF 1	4155 OASIS ROAD, REDDING, CA 96003